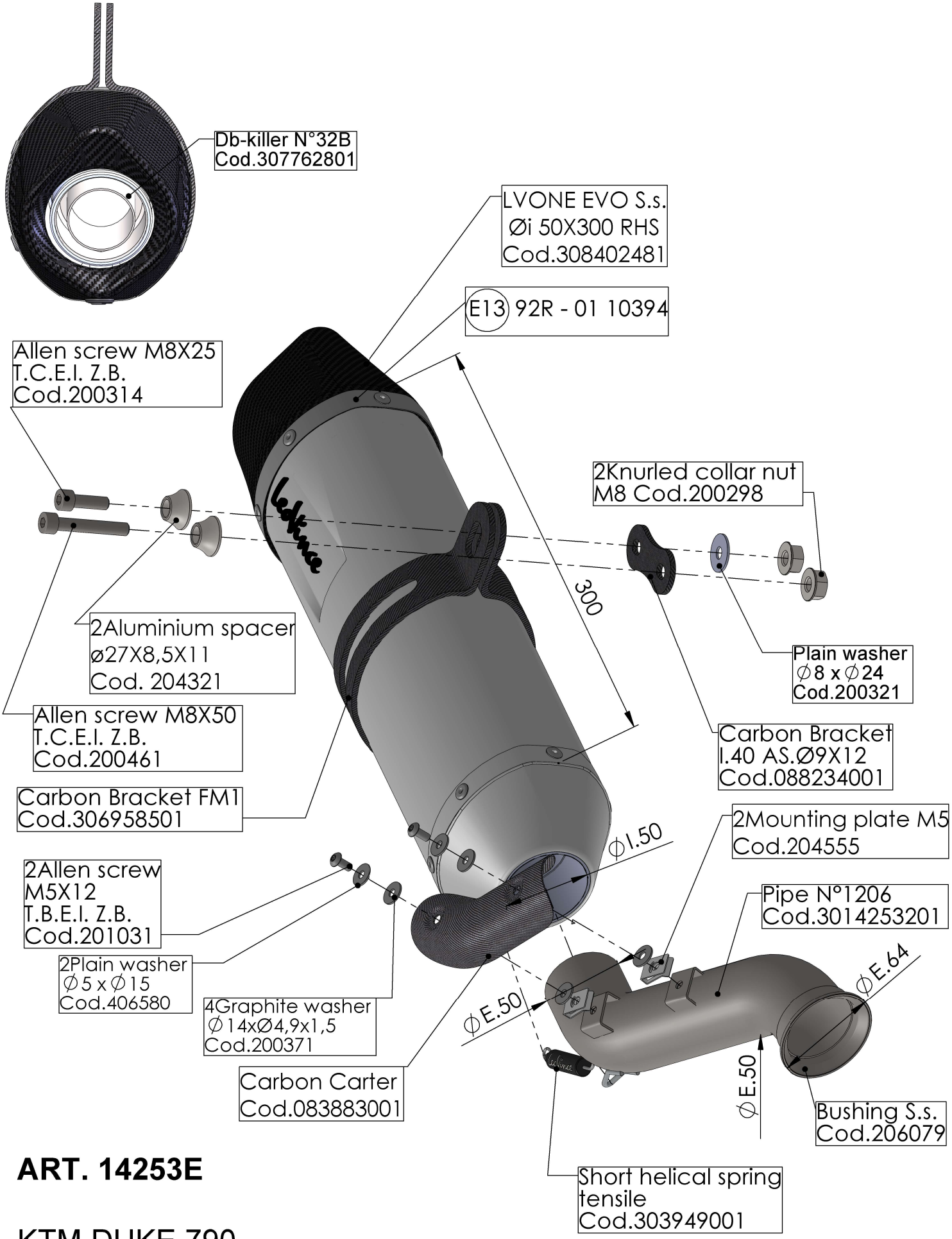

ART. 14253E

KTM DUKE 790

SLIP-ON - LV ONE EVO - STAINLESS S.- APPROVED